DREMEL® MODEL 1672 TYPE 1 SCROLL SAW

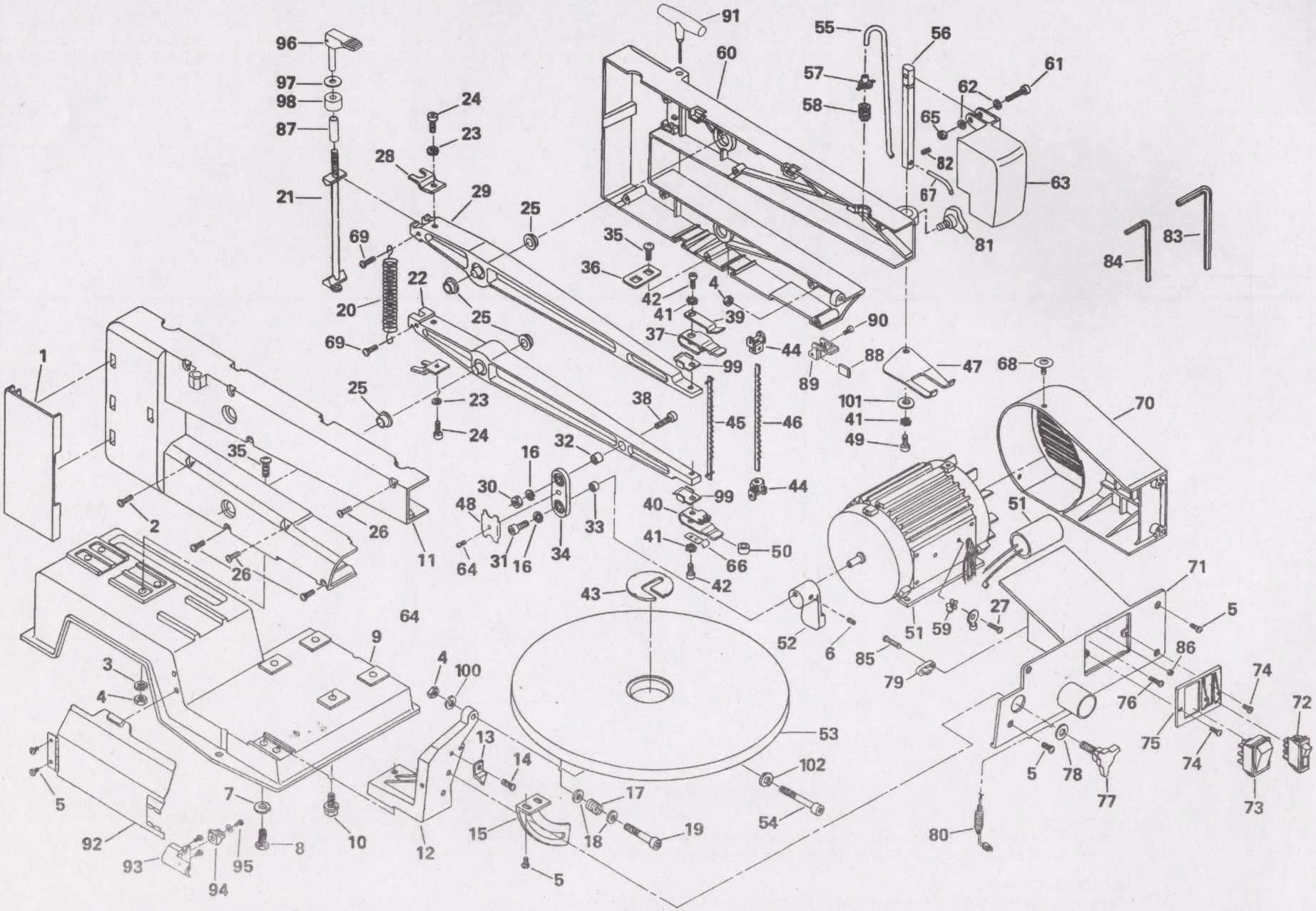

CODE NO.	PART NO.	DESCRIPTION
1	5296183	Blade Box
2	5296195	Self Tap Screw (5)
3	9730	Spring Washer (4)
4	11489	Hex Nut (6)
5	5296196	Pan Head Screw (8)
6	358518	Set Screw
7	44549	Spring Washer (2)
8	5296197	Hex Head Bolt (2)
9	2610909501	Base
10	706214	Sems Screw (4)
11	5296992	Housing Left
12	2610909168	Supp. Table Assy.
13	5296177	Indicator
14	4775	Round Head Screw
15	5296154	Bracket Tilt
16	9709	Spring Washer (2)
17	5296165	Spring
18	67034	Flat Washer (2)
19	5296198	Hex Head Bolt
20	5296749	Spring
21	2610909162	Bolt Tension Linkage
22	5296201	Lower Rocker Arm Assy.
23	1734	Spring Washer (2)
24	306064	Hex Head Bolt (2)
25	5296159	Bearing Flange (4)
26	5296202	Self Tap Screw (4)
27	5296217	Pan Head Screw
28	5296164	Retainer (2)
29	5296213	Upper Rocker Arm Assy.
30	1309	Hex Nut
31	306127	Hex Head Bolt
32	5296166	Spacer Bearing
33	5296167	Washer
34	5296203	Link Assembly
35	304837	Round Head Bolt (4)

CODE NO.	PART NO.	DESCRIPTION
36	5296179	Set Plate (2)
37	2610909154	Holder Upper
38	313236	Hex Socket Bolt
39	2610909155	Set Plate Upper Holder
40	5296186	Holder Lower
41	21599	Tooth Washer (3)
42	2610910000	Hex Socket Head Bolt (2)
43	5296746	Table Insert
44	16436	Blade Adapter (2)
45		Blade (Pin Type)
46		Blade (Plain)
47	2610909156	Guard Blade
48	358522	Fence
49	2610909157	Hex Socket Head Bolt
50	5296175	Bolt Collar (2)
51	5296194	Motor & Capacitor
52	5296210	Eccentric
53	5296191	Table
54	29359	Hex Socket Head Bolt
55	5296162	PVC Pipe
56	2610909151	Support Rod
57	5296745	Bellows Lock
58	5296744	Bellows
59	5296247	Tooth Washer
60	5296993	Housing Right
61	2610909163	Hex Socket Head Bolt
62	2610909152	Washer (2)
63	2610909153	Transparent Guard
64	351129	Screw (M4x16-8)
65	2610909150	Hex Nut
66	5296508	Set Plate Lower
67	5296163	Brass Pipe
68	2610909500	Sems Screw (2)
69	2610909504	Shoulder Screw (2)
70	2610909160	Fan Box

CODE NO.	PART NO.	DESCRIPTION
71	2610909161	Switch Case
72	5296218	On/Off Switch
73	5296219	Hi/Lo Switch
74	5296220	Self Tap Screw (2)
75	5296153	Switch Cover
76	5296221	Cap Head Screw (4)
77	5296172	Knob
78	26111	Flat Washer
79	5296773	Cord Clamp
80	5296223	Power Supply Cord
81	5296242	Knob
82	5296243	Set Screw
83	2610909158	Allen Wrench (3.5mm)
84	5296245	Allen Wrench (2.5mm)
85	5296971	Screw (M4x0.7-25)(2)
86	358521	Nut (M4x0.7) (2)
87	2610909176	Spacer
88	2610910027	Clamp
89	2610910026	Blade adapter
90	2610910042	Socket Hd. Cap Screw
91	2610909159	T-Handle Wrench (3.5mm)
92	2610909164	Door & Hinge Assy.
93	2610909165	Handle
94	2610909166	Clip
95	358171	Pan Hd. Self Tap Screw (3)
96	2610909184	Tension Lever Assy.
97	2610909178	Washer
98	2610909182	Foam Washer
99	2610910001	Spacer (2)
100	355325	Lockwasher
101	2610910005	Flat Washer
102	2610909171	Wave Washer

WRITE FOR CURRENT PRICES—NO C.O.D.'S

UNITED STATES
Dremel Service Center, 4915 Twenty-First St., Racine, WI 53406
Dremel Service Center, 4631 E. Sunny Dunes, Palm Springs, CA 92262

EASTERN CANADA
Giles Tool Agency, 6520 Lawrence av. east. Scarborough, Ont. Canada M1C 4A7

OUTSIDE OF CONTINENTAL UNITED STATES
See your local distributor or write to Dremel,
4915 Twenty-First St., Racine, WI 53406

DREMEL
Form No. 2615297682 6/95

4915 21st Street

RACINE, WISCONSIN 53406 U.S.A.
PRINTED IN TAIWAN